SYSTEM WIRING DIAGRAMS
Memory Seat Circuit
1993 BMW 525i
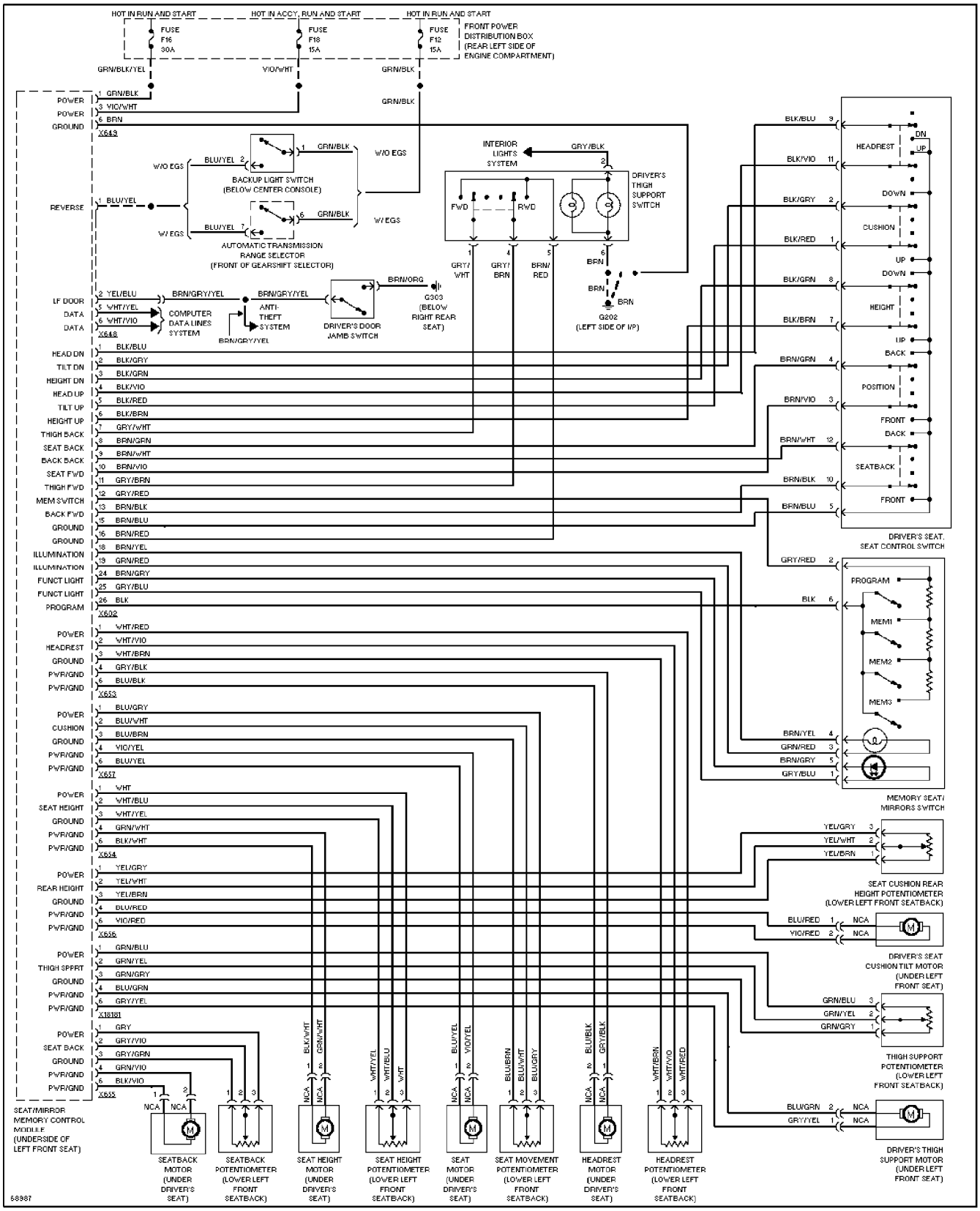
For DIAKOM-AUTO http://www.diakom.ru Taganrog support@diakom.ru (8634)315187
Copyright © 1998 Mitchell Repair Information Company, LLC
Tuesday, November 21, 2000 03:43PM